1. Note

A: NOTE

This information will improve the efficiency of maintenance and assure that the finished work is of a good quality.

1. FASTENERS NOTICE

Fasteners are used to prevent the parts from damage, dislocation and play due to looseness. Fasteners must be tightened to the specified torque.
Do not apply paint, lubricant, rust retardant or other substance to the surface around bolts, nuts, etc. Doing so will make it difficult to obtain the correct torque and result in looseness and other problem.

2. STATIC ELECTRICITY DAMAGE

Do not touch the control modules, connectors, logic boards and other such parts when there is a risk of static electricity. Always use a static electricity prevention cord or touch grounded metal for the elimination of static electricity before conducting work.

3. BATTERY

When removing the battery cables, always be sure to turn the ignition switch to OFF to prevent electrical damage to the control module from overcurrent.

4. SERVICE PARTS

Use genuine parts for maximum performance and maintenance when conducting repairs. Subaru/FHI will not be responsible for poor performance resulting from the use of parts except for genuine parts.

5. PROTECTING VEHICLE UNDER MAINTENANCE

Make sure to attach the fender cover, seat covers, etc. before work.

6. ENSURING SECURITY DURING WORK

When working in a group of two or more, perform the work with calling each other to ensure mutual safety.

7. LIFT AND JACK

When using a lift or shop jack to raise a vehicle or using rigid rack to support a vehicle, always follow instructions concerning jack-up points and weight limits to prevent the vehicle from falling, which could result in injury. Be especially careful that the vehicle is balanced before raising it. Be sure to set the wheel stoppers when jacking-up only the front or rear side of the vehicle.

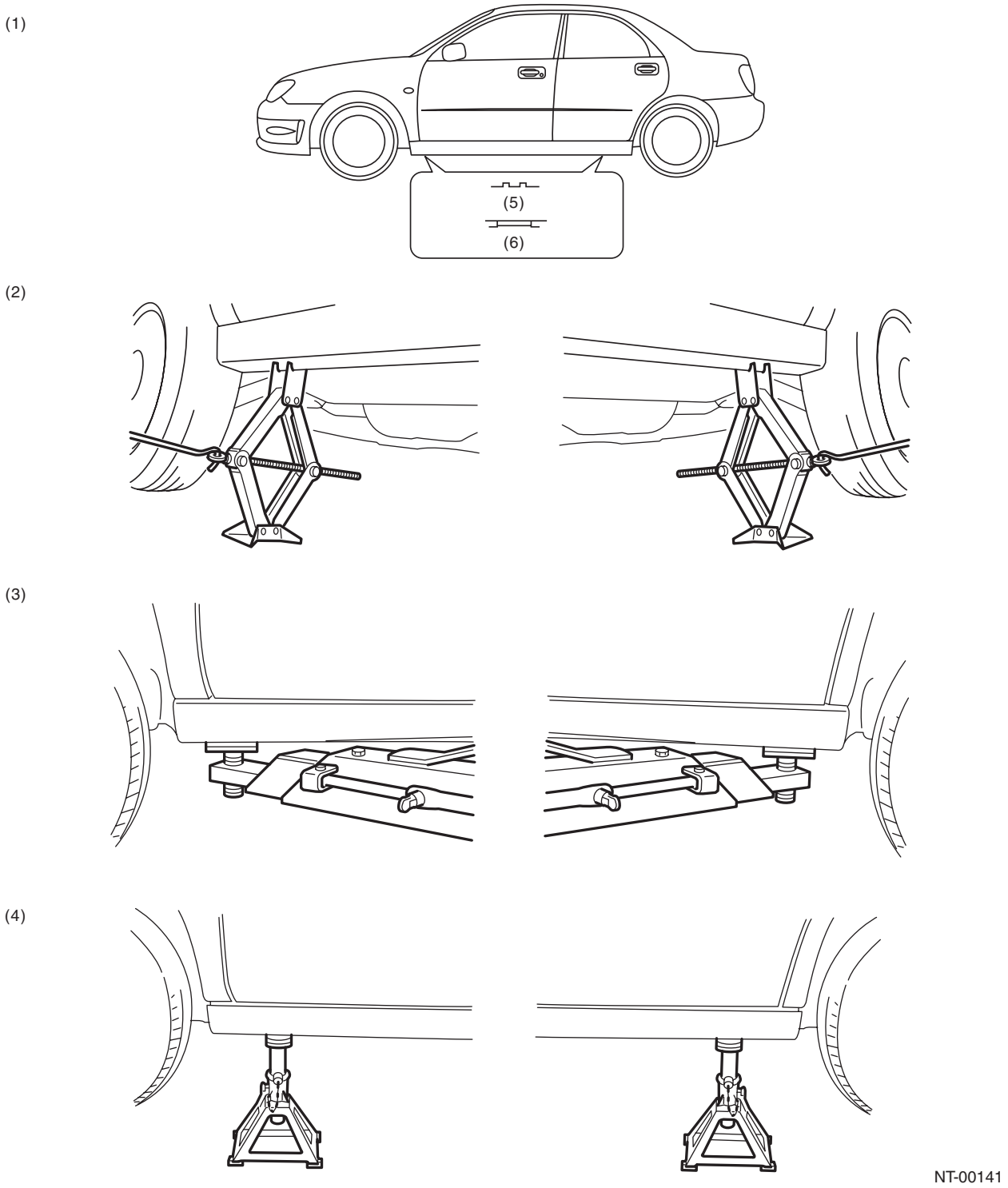

(1) Supporting locations
(2) Pantograph jack
(3) Lift
(4) Rigid racks
(5) Without side sill cover
(6) With side sill cover

NOTE

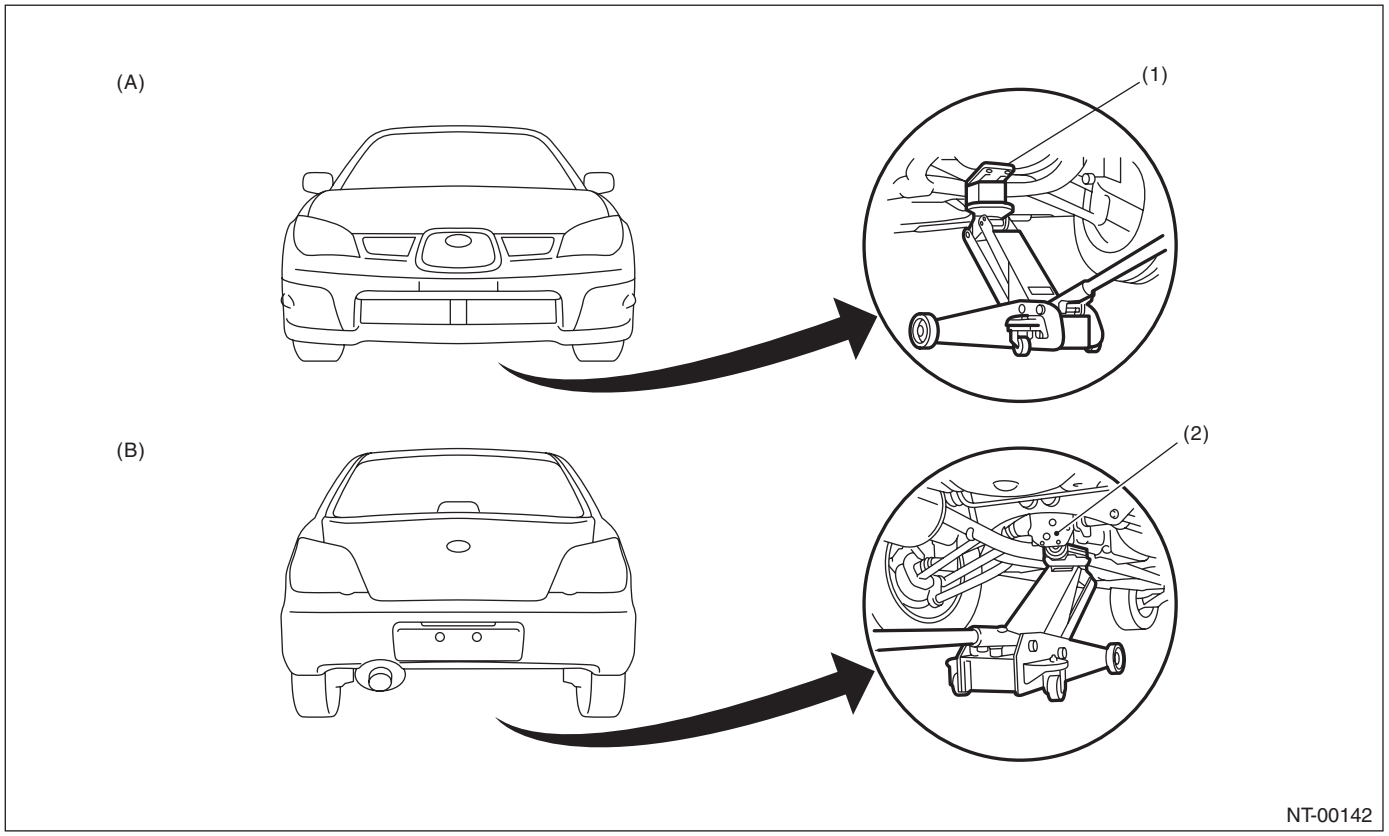

(A)	Front	(B)	Rear
(1)	Front crossmember	(2)	Rear differential

8. TIE-DOWNS

Tie-downs are used when transporting vehicles and when using the chassis dynamo. Attach tie-down only to the specified place on the vehicle.

Tie-down location

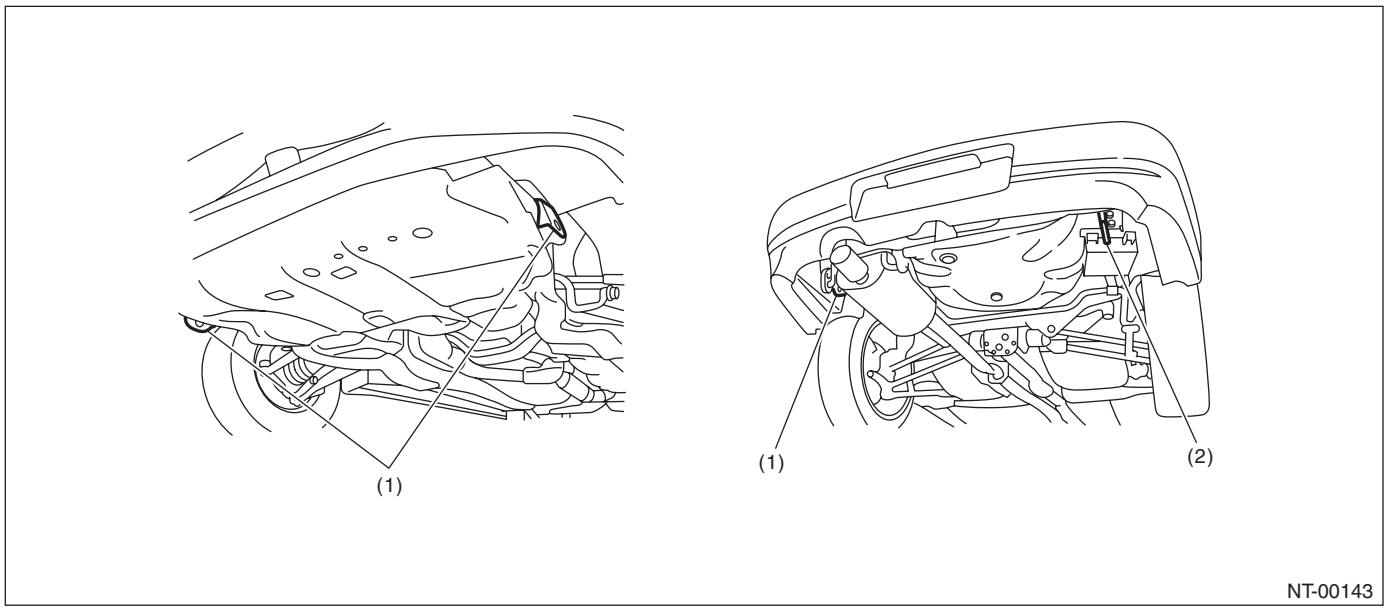

(1) Hook for tie-down (2) Hook for tie-down and towing

Chain direction at tie-down condition

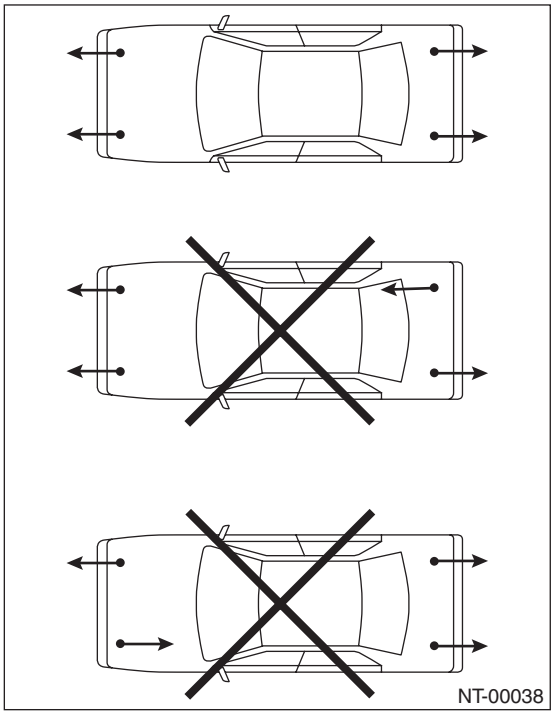

Chain pulling range at tie-down condition

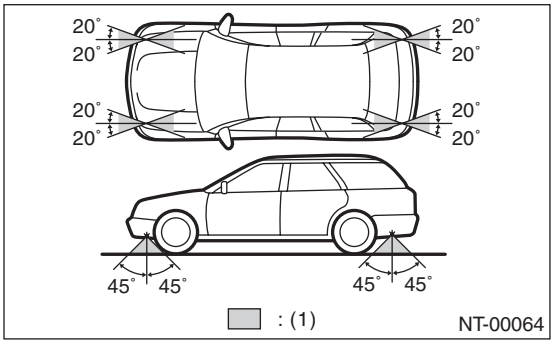

(1) Chain pulling range at tie-down condition

Vehicle sinking volume at tie-down condition

Measure the distance “L” between the highest tire point and highest arch point before and after tie-down. Difference of measured values (sinking volume) should be within 50 mm (1.97 in) and make sure to fix the vehicle securely.

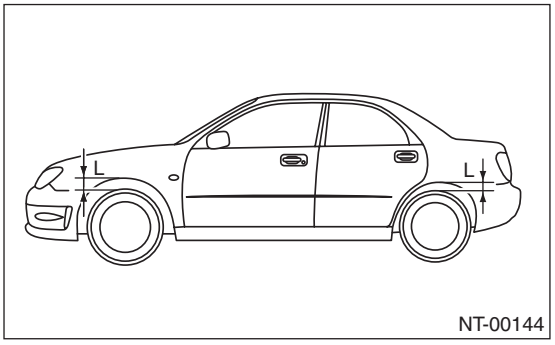

9. TOWING

Avoid towing vehicles except when the vehicle cannot be driven. For models with AWD, AT or VTD, use a loader instead of towing. When towing other vehicles, pay attention to the following to prevent hook or vehicle damage resulting from excessive weight.

- Do not install the hook except when towing.
- Do not tow other vehicles with a front tie-down hook.
- Make sure the vehicle towing is heavier than the vehicle being towed.

Front

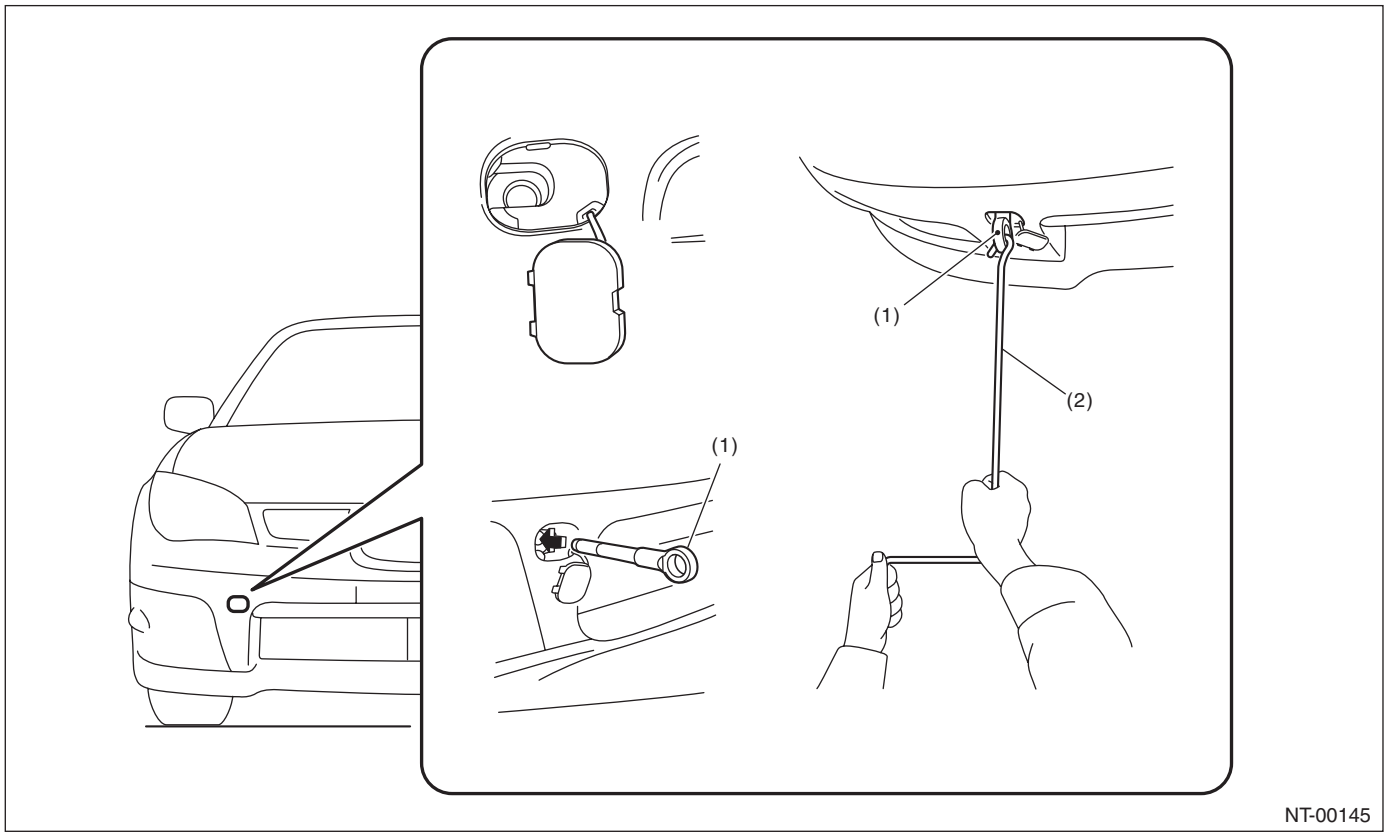

(1) Eye bolt (2) Jack handle

Rear

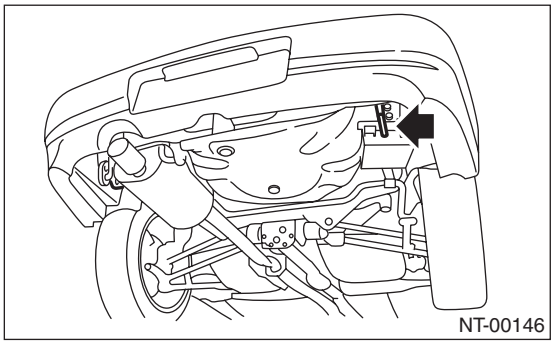

10.FRONT HOOD STAY INSTALLATION

At the check and general maintenance

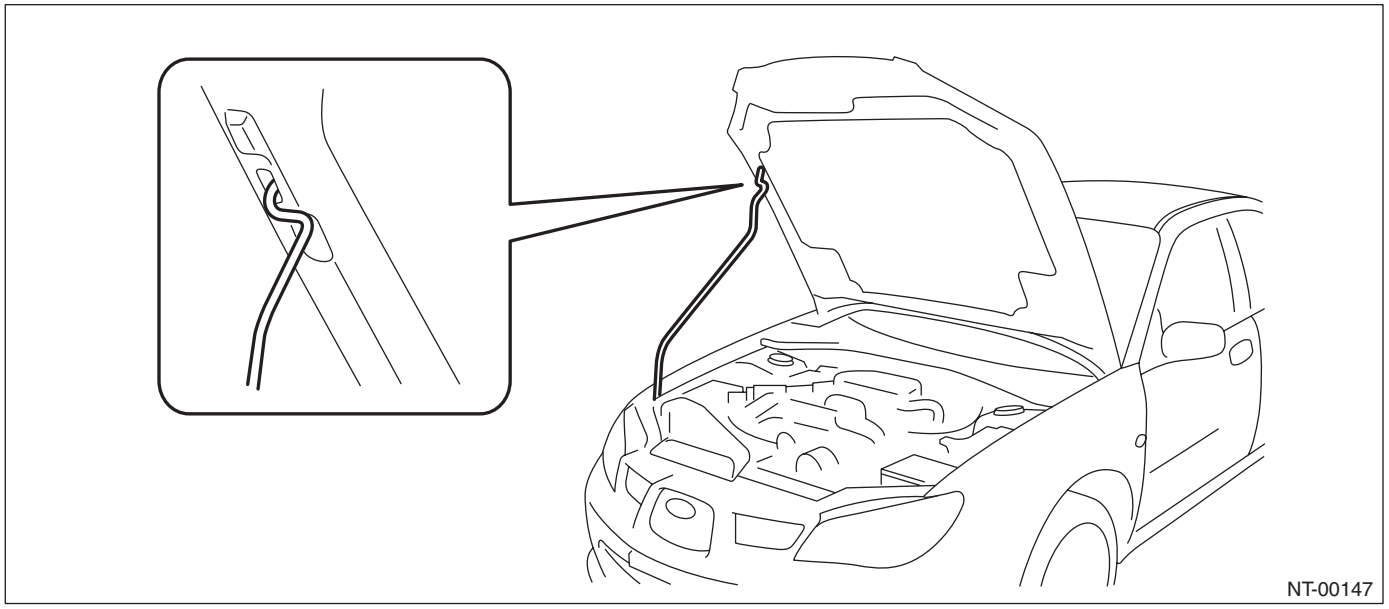

When wider hood opening is necessary

1) Remove the hood stay.
2) Set the stay into the hole of front hood inner.
3) Remove the grommet in the wheel apron, and set the lower end of stay into hole.

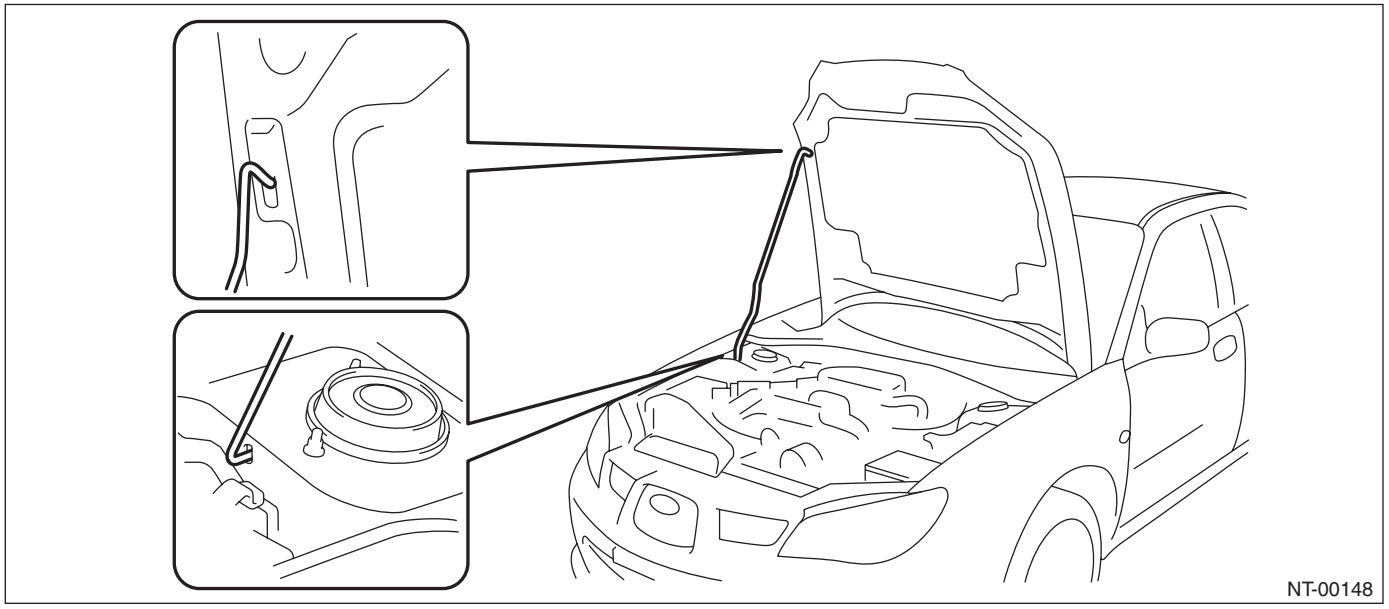

11.TRAINING

For an information about training, contact a dealer or agent.

12.GENERAL SCAN TOOL

Using general scan tools will greatly improve the efficiency of repairing engine electronic controls. Subaru Select Monitor can be used to diagnose the engine, ABS, AT and other electronically controlled parts.

NOTE

IDENTIFICATION

ID

Page
1. Identification 2